VBMS - Vehicle Battery Management System

- Suitable for up to 4 battery banks
- Monitors voltage, state of charge (% remaining), state of health (% remaining), temperature, time remaining (hrs/mins) and net charge / discharge (amps)
- Intelligently controls Power Gateways to maintain the best charge / discharge efficiency and protect batteries from damage
- Improves crew safety as well as saves money on unnecessary battery replacements and fuel

VBMS includes our DataCell II Battery Monitor (see datasheet) and combines it with intelligently controlled power gateways that automatically control the charge to each battery bank on-board and in turn how little or much they supplement each other during discharge. The gateways also allow battery banks to be turned on and off via a centralised control and monitoring panel on the vehicle dash and automatically protect each battery bank from over-discharge prolonging their life.

This automated system is configured in software for different vehicle types accommodating different battery setups and mission profiles.

VBMS can improve silent watch times by 25-50% by “power sharing” during discharge. By ensuring batteries work within their design parameters, vehicles are also far less likely to experience “power brownouts” during missions - which are a serious safety issue. Battery replacement costs are also reduced as well as fuel usage and engine maintenance (crews can see when the engine needs to be run to provide charge to batteries rather than idling when it’s not needed).

Installation Example:

The overview to the right shows a two battery bank installation and VBMS connected to both its own LCD control and monitoring panel and to a vehicle CAN Bus network.

Current shunts are available rated at either 500A or 1000A. Power Gateways are available with different current ratings dependent on alternator size.

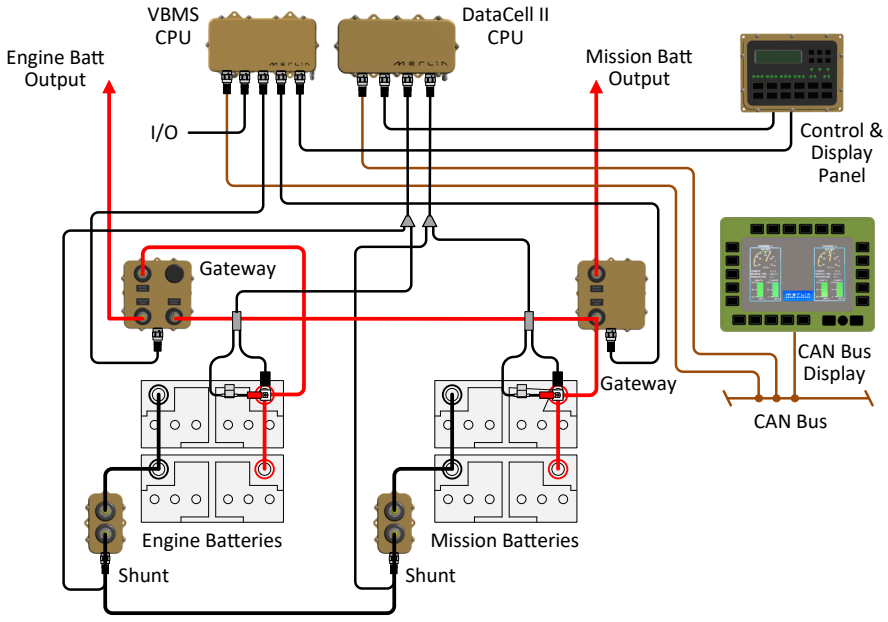

Merlin Equipment Limited, Unit 4, Cabot Business Village, Poole, Dorset, BH17 7BA, United Kingdom

T: +44 (0) 1202 697979 F: +44 (0) 1202 691919 W: www.merlinequipment.com

VBMS - Vehicle Battery Management System

Software:

VBMS is supplied with windows software allowing user configuration and real time monitoring and datalogging.

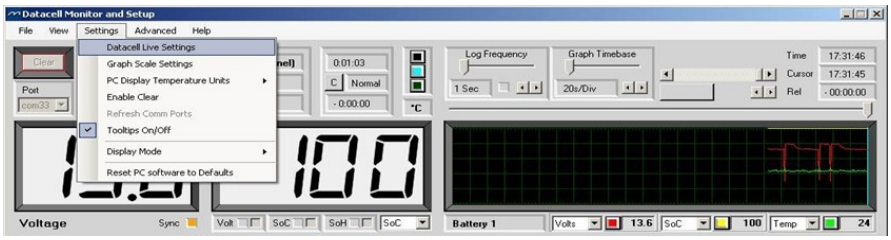

Standards:

MIL-STD-461

Electromagnetic Compatibility

MIL-STD-810

Environmental

MIL-STD-1275

28V DC Systems

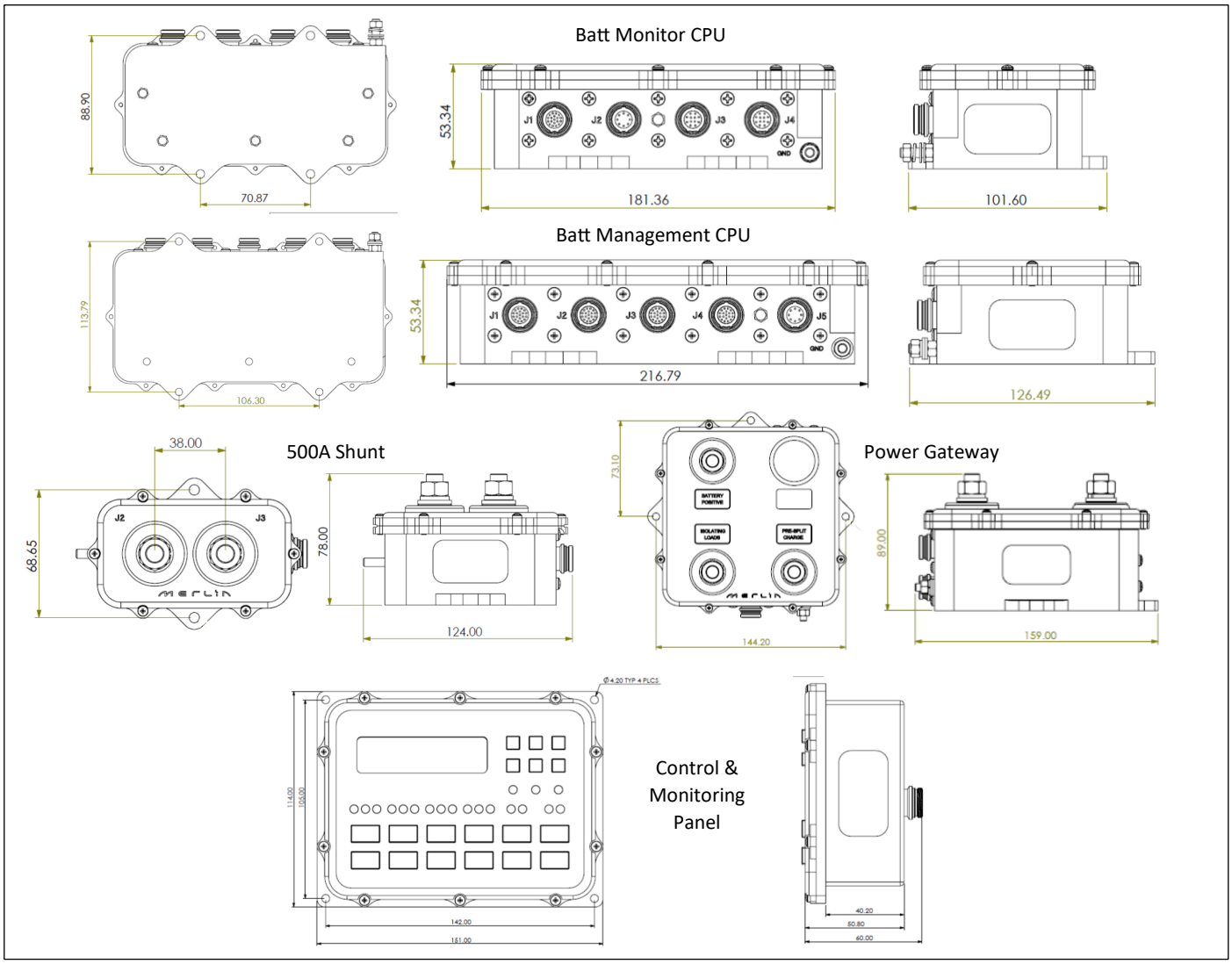

All specifications are provided in best possible faith but may be subject to change without notice. The Merlin Logo, slogan "The Power People" and M-Power are trade marks of Merlin Equipment Limited. All business is transacted according to our Standard Terms & Conditions, a copy of which is available upon request.

Merlin Equipment Limited, Unit 4, Cabot Business Village, Poole, Dorset, BH17 7BA, United Kingdom

T: +44 (0) 1202 697979 F: +44 (0) 1202 691919 W: www.merlinequipment.com